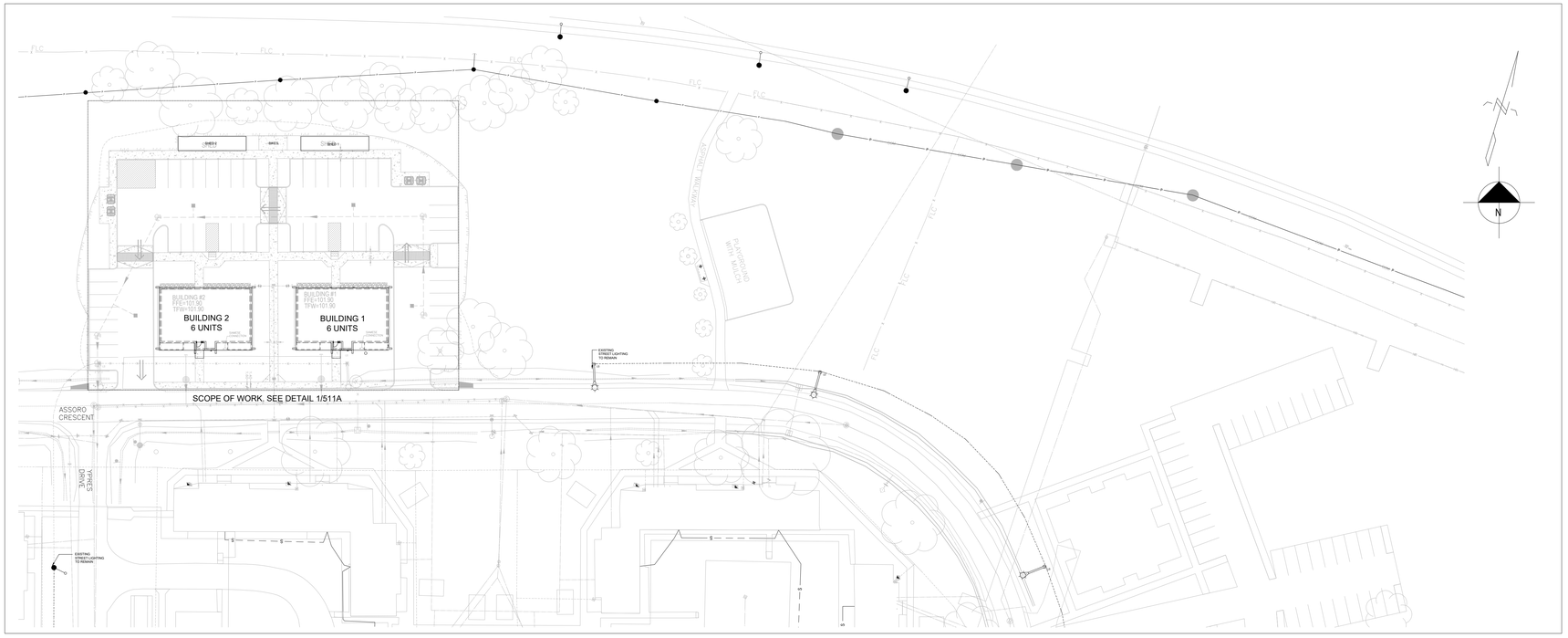

1 / 510-A KINGSTON - BUILDINGS 1 & 2 KEY PLAN

SCALE: 1 : 500

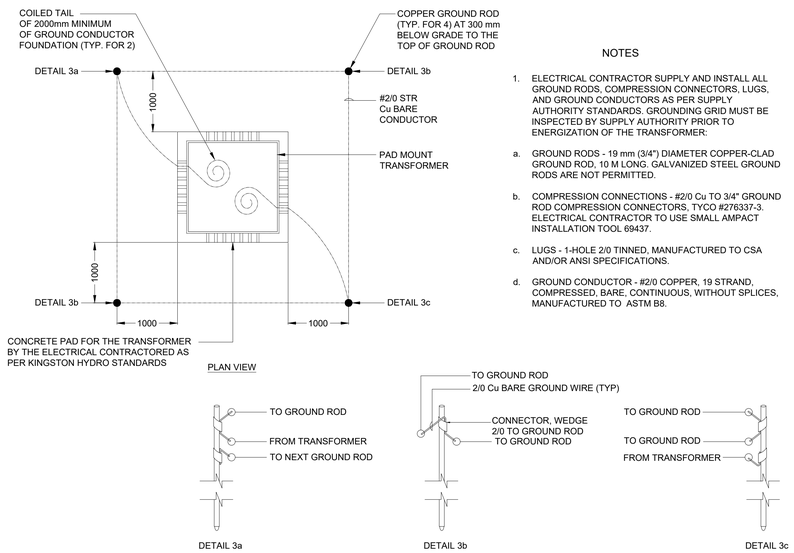

NOTES

1. ELECTRICAL CONTRACTOR SUPPLY AND INSTALL ALL GROUND RODS, COMPRESSION CONNECTORS, LUGS, AND GROUND CONDUCTORS AS PER SUPPLY AUTHORITY STANDARDS. GROUNDING GRID MUST BE INSPECTED BY SUPPLY AUTHORITY PRIOR TO ENERGIZATION OF THE TRANSFORMER:

a. GROUND RODS - 19 mm (3/4") DIAMETER COPPER-CLAD GROUND ROD, 10 M LONG. GALVANIZED STEEL GROUND RODS ARE NOT PERMITTED.

b. COMPRESSION CONNECTIONS - #2/0 Cu TO 3/4" GROUND ROD COMPRESSION CONNECTORS, TYCO #276337-3. ELECTRICAL CONTRACTOR TO USE SMALL AMPACT INSTALLATION TOOL 69437.

c. LUGS - 1-HOLE 2/0 TINNED, MANUFACTURED TO CSA AND/OR ANSI SPECIFICATIONS.

d. GROUND CONDUCTOR - #2/0 COPPER, 19 STRAND, COMPRESSED, BARE, CONTINUOUS, WITHOUT SPLICES, MANUFACTURED TO ASTM B8.

3 / 510-A PAD MOUNT TRANSFORMER GROUNDING DETAIL

N.T.S

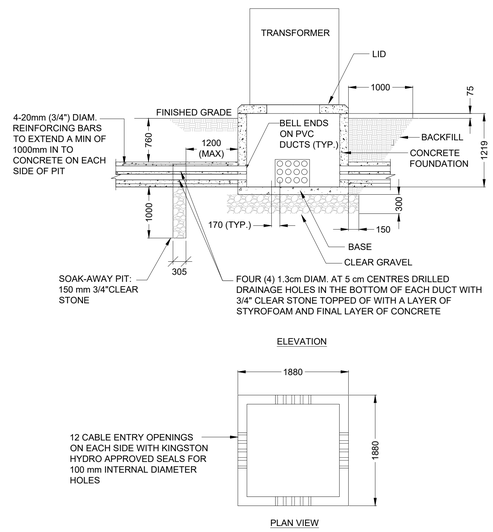

NOTES

1. THE CONCRETE FOUNDATION, BASE AND LID ARE THE SUBJECT TO KINGSTON HYDRO APPROVAL.

2. INSTALLATION IS SUBJECT TO KINGSTON HYDRO INSPECTION:

a. FINAL POSITION OF LID OPENING IS BY KINGSTON HYDRO INSPECTOR.

b. SPACE AROUND CONDUCTOR IN DUCT OPENINGS SHALL BE SEALED WITH APPROVED FOAM AFTER GROUND WIRE IS INSTALL.

c. PLASTIC SEALS OVER UNUSED HOLES SHALL REMAIN INTACT.

3. BACKFILL (CLEAN EARTH, SAND, OR PEA GRAVEL) SHALL BE PLACED IN 100mm THOROUGHLY COMPACTED LAYERS (TO 95% STANDARD PROCTOR) AROUND FOUNDATION. BACKFILL SHALL BE INSTALLED AT 1.0 M OFFSET FROM FOUNDATION AT GRADE, TAPERING TO 150 mm OFFSET FROM CONCRETE BASE.

4. A 300 mm LAYER OF TAMPED GRAVEL (150 mm CLEAR GRAVEL) SHALL BE PLACED UNDER CONCRETE BASE, EXTENDING 150 mm FROM ALL SIDES OF CONCRETE BASE FOR DRAINAGE AND STABILITY.

5. SURFACE AREA AROUND THE TOP OF FOUNDATION TO BE RESTORED TO ORIGINAL SITE CONDITION.

2 / 510-A PAD MOUNT TRANSFORMER CONCRETE BASE TYPICAL DETAIL

N.T.S

LIGHTING FIXTURES SCHEDULE

TAG NUMBER	IMAGE	LAMP TYPE	FIXTURE WATTS	COLOR TEMP.	CRI	FIXTURE LUMENS	VOLTS	BALLAST/ DRIVER	DESCRIPTION	MOUNTING	REMARKS
LS1		LED	TBD	3000	>70	TBD	120	0-10V DIMMING	POLE MOUNTED LED LIGHTING FIXTURE TO MEET DARK SKY COMPLIANT AND CITY OF KINGSTON REQUIREMENTS.	POLE	FIXTURE TYPE, INSTALLATION AND CONNECTION TO BE COORDINATED WITH KINGSTON HYDRO. THIS CONTRACTOR TO OBTAIN STANDARD DRAWINGS AND DOCUMENTATION FROM CITY OF KINGSTON. CONTACT SEAN KOESTER @ SKOESTER@KINGSTON-NY.GOV OR BY PHONE 845-334-3969.

DRAWING LIST

DRAWING NUMBER	TITLE
L-KN-ZKN99-510-A	LEGEND OF SYMBOLS, KEY PLAN AND DETAILS
L-KN-ZKN99-511-A	ELECTRICAL SITE PLAN, NOTES AND DETAILS

LEGEND OF SYMBOLS

SYMBOL	DESCRIPTION
XX / XX-XX	DETAIL NUMBER / DETAIL SHEET
AFF	ABOVE FINISHED FLOOR
WP	WEATHER PROOF
#	KEYNOTE
TYP.	TYPICAL
C/W	COMPLETE WITH
U/G	UNDERGROUND
N.T.S	NOT TO SCALE
N.I.C	NOT IN CONTRACT
MH	MANHOLE
	POWER AND/OR DISTRIBUTION TRANSFORMER
	SURFACE MOUNTED PANEL BOARD
	DISCONNECT SWITCH - NON-FUSIBLE
F	FUSED DISCONNECT SWITCH
P	PULL BOX
	DUPLEX RECEPTACLE (5-20R CSA CONFIGURATION)
L5-30R	SINGLE RECEPTACLE L5-30R DENOTES RECEPTACLE TYPE / CSA CONFIGURATION
	120/208V, 3P DIRECT CONNECTION TO EQUIPMENT
	WALL MOUNTED LIGHTING FIXTURE
	POLE MOUNTED LIGHTING FIXTURE
	GROUND ROD
	GROUND CONNECTION
	LOW VOLTAGE CIRCUIT BREAKER
30A	LOW VOLTAGE DISCONNECT SWITCH NUMBER DENOTES AMPERE RATING
15A	FUSE NUMBER DENOTES FUSE RATING
	DISTRIBUTION TRANSFORMER
kW	kW METER
P	EXISTING HYDRO PRIMARY FEEDERS
S	EXISTING HYDRO SECONDARY FEEDERS
SL	EXISTING STREET LIGHTING

SYMBOLS AND LEGEND AS APPLICABLE

Government of Canada / Gouvernement du Canada

LEVEL OF SECURITY | NIVEAU DE SÉCURITÉ
UNCLASS

REPUBLIC ARCHITECTURE INC
385 St. Mary Avenue
Winnipeg, MB R3C 0N1
T 204 989 0102
F 204 989 0094
www.republicarchitecture.ca

LICENSED PROFESSIONAL ENGINEER
S. J. STOOPS
100502277
2025-JAN-24
PROVINCE OF ONTARIO

NO.	DATE	REVISION	APPR.
1	2025/01/24	ISSUED FOR TENDER	T.R

SCALE | ÉCHELLE: AS NOTED

LOCATION | EMPLACEMENT: Canadian Forces Base (CFB) KINGSTON, ON

PROJECT | PROJET: Canadian Forces Housing Agency (CFHA) Apartment Buildings Tier 4 6-Plex

TRADE | MÉTIER: ELECTRICAL

DATE: 2025/01/24

SUBJECT | SUJET: LEGEND OF SYMBOLS, KEY PLAN AND DETAILS

PRODUCTION | REVIEWED | REVU

DESIGNED | ÉTUDIÉ: T.R | DES O | AGENT CONC

DRAWN | DESSINÉ: T.R | PRO MGR | GÉST PROJ

CHECKED | VÉRIFIÉ: S.R | DES MGR | GÉST CONC

COORDINATION: REPUBLIC | FIRE | INCENDIE

WBS NUMBER | NO. SRT: WBS # | PF NUMBER | NO. DP: ZKN99

DWG. NO. | NO. DESSIN: L-KN - ZKN99 - 510-A

Canada

BORDER LAST UPDATED 2010-08-20

2024-07-18 9:06:21 AM C:\Revit_Local_Files\742_CFHA_Tier 4_CENTRAL 2024_s.bbenfin.rvt

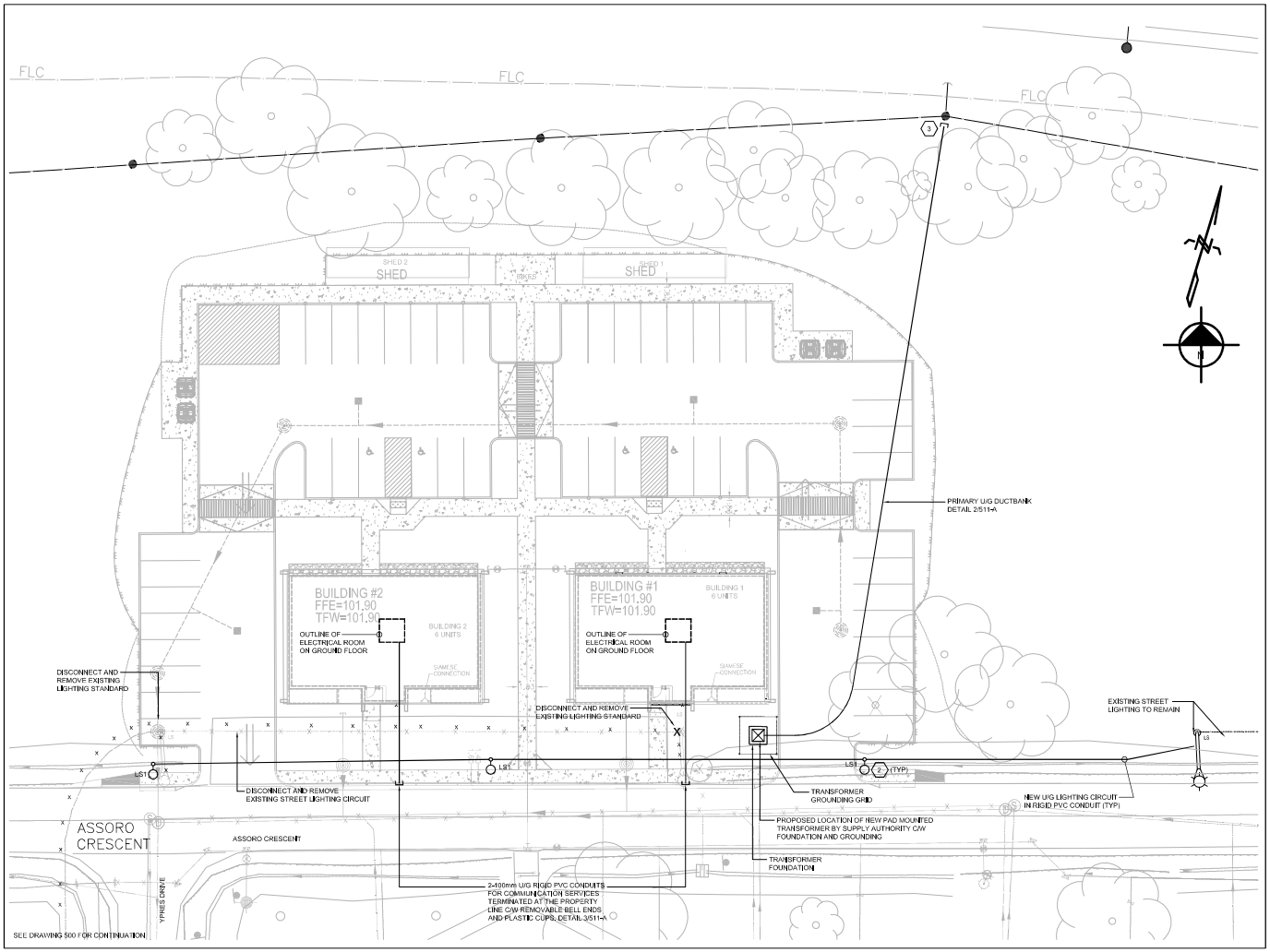

1 / 511-A KINGSTON - BUILDINGS 1 & 2 SITE PLAN

SCALE: 1:200

GENERAL NOTES

1. PRIOR TO STARTING THE WORK CONSULT WITH THE SUPPLY AUTHORITY AND COORDINATE THE CONSUMERS SERVICE CONNECTION TO THEIR PAD MOUNT TRANSFORMER.
2. THE SUPPLY AUTHORITY IS KINGSTON HYDRO CORPORATION, PO BOX 790, KINGSTON, ON K7L 4X7.
3. PAY ALL COSTS, CHARGES AND FEES RELATED THERETO, COMPLY WITH ALL SUPPLY AUTHORITY STANDARDS AND REQUIREMENTS (OWNER WILL PAY SERVICE CONNECTION COST DIRECTLY TO KINGSTON HYDRO).
4. THE SUPPLY AUTHORITY WILL PROVIDE (SUPPLY AND INSTALL) PAD MOUNTED TRANSFORMER, PRIMARY CABLES FROM POWER GRID TO THE TRANSFORMER IN UNDERGROUND DUCT BANK, PRIMARY AND SECONDARY CONNECTIONS AT THE TRANSFORMER, AND REVENUE METERS.
5. THE ELECTRICAL CONTRACTOR TO PROVIDE (SUPPLY AND INSTALL) TRANSFORMER FOUNDATION, TRANSFORMER GROUNDING GRID, PRIMARY AND SECONDARY DUCT BANKS, SECONDARY CABLES IN UNDERGROUND DUCT BANK FROM PAD MOUNTED TRANSFORMER AND CONNECTION TO CUSTOMER DISTRIBUTION EQUIPMENT.
6. PAD MOUNTED TRANSFORMER, PRIMARY AND SECONDARY FEEDERS WILL BE OWNED AND OPERATED BY SUPPLY AUTHORITIES.
7. KINGSTON HYDRO APPROVAL/INSPECTIONS FOR ALL THE ABOVE PRIOR TO AND DURING INSTALLATION.
8. THE SUPPLY AND INSTALLATION OF PRODUCTS FOR, AND THE COORDINATION AND COOPERATION WITH THE SUPPLY AUTHORITY, INCLUDING OBTAINING THEIR STANDARDS WITH DRAWINGS TO ENSURE INSTALLATION IS IN ACCORDANCE WITH REQUIREMENTS. IS A REQUIREMENT OF THIS CONTRACT.
9. ELECTRICAL CONTRACTOR TO VERIFY ON SITE EXACT LOCATION OF ALL EXISTING UNDERGROUND SERVICES PRIOR TO EXCAVATION FOR NEW INCOMING SERVICES INSTALLATION. CARRY OUT ALL TRENCH EXCAVATION IN STRICT CONFORMITY WITH ALL APPLICABLE ACTS AND BYLAWS. ELECTRICAL CONTRACTOR IS FULLY RESPONSIBLE FOR ANY DAMAGE CAUSED BY THEIR COMPANY TO THE EXISTING UNDERGROUND SERVICES SUCH AS BUT NOT LIMITED TO HIGH VOLTAGE, TELEPHONE, CABLE TV, GAS, COLD WATER, SPRINKLER, SEWER, STORM, ETC.
10. ELECTRICAL CONTRACTOR TO REPLACE PORTION OF EXISTING STREET LIGHTING WITH NEW TO SUPPORT NEW ROAD ENTRANCES AND PARKING LOT, STREET LIGHTING TO COMPLY WITH CITY OF KINGSTON STANDARDS.

KEY NOTES

1. FOR FEEDERS FROM PAD MOUNTED TRANSFORMER TO THE BUILDING ELECTRICAL ROOMS, PARKING LIGHTING AND PEDESTALS SEE BUILDING PACKAGE DRAWING L-KN-ZKN99-508-B.
2. LIGHTING FIXTURE TYPE LS1 TO BE CONNECTED TO KINGSTON HYDRO STREET LIGHTING CIRCUIT. FIXTURES TYPE, POLES, INSTALLATION REQUIREMENTS TO BE AS PER CITY OF KINGSTON AND KINGSTON HYDRO REQUIREMENTS AND STANDARDS AND TO THEIR APPROVAL.
3. EXACT TERMINATION POINT OF PRIMARY DUCT BANK AT THE EXISTING POWER POLE TO BE COORDINATED WITH KINGSTON HYDRO AND TO THEIR APPROVAL.

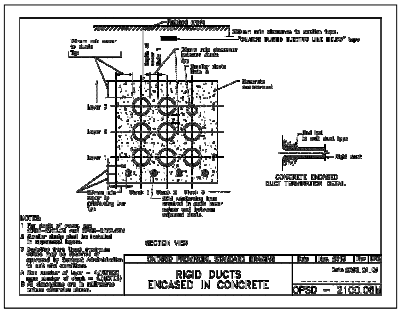

2 / 511-A UNDERGROUND DUCT BANK - PRIMARY

N.T.S

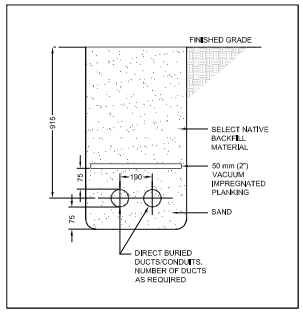

3 / 511-A UNDERGROUND DUCTS

N.T.S

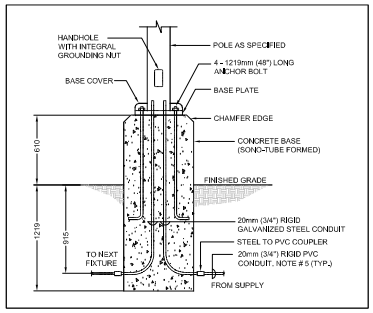

4 / 511-A LIGHTING POST BASE DETAIL

N.T.S

Government of Canada / Gouvernement du Canada

LEVEL OF SECURITY | NIVEAU DE SECURITE
UNCLASS

REPUBLIC ARCHITECTURE INC
385 St. Mary Avenue
Winnipeg, MB R3C 0N1
T 204 989 0102
F 204 989 0094
www.republicarchitecture.ca

LICENSED PROFESSIONAL ENGINEER
S. J. STOOPS
100502277
2025-FEB-03
PROVINCE OF ONTARIO

NO.	DATE	REVISION	APPR.
2	2025/02/03	ISSUED FOR TENDER R1	TJR
1	2025/01/24	ISSUED FOR TENDER	TJR

SCALE | ÉCHELLE
AS NOTED

LOCATION | EMPLACEMENT
Canadian Forces Base (CFB)
KINGSTON, ON

PROJECT | PROJET
Canadian Forces Housing Agency (CFHA) Apartment Buildings
Tier 4 6-Plex

TRADE | MÉTIER: ELECTRICAL
DATE: 2025/01/24

SUBJECT | SUJET
ELECTRICAL SITE PLAN, NOTES AND DETAILS

PRODUCTION	REVIEWED | REVU	
DESIGNED | ÉTUDIÉ: TJR		DES O | AGENT CONC
DRAWN | DESSINÉ: TJR		PRO MGR | GEST PROJ
CHECKED | VÉRIFIÉ: SJR		DES MGR | GEST CONC
COORDINATION: REPUBLIC		FIRE | INCENDIE

WBS NUMBER | NO. SRT: WBS #
PF NUMBER | NO. DP: ZKN99
DWG. NO. | NO. DESSIN: L-KN - ZKN99 - 511-A

Canada

2024-12-13 9:00:12 AM C:\Users\Local_Files\R13_CFHA_Tier_4_GENERAL_2019_Local.rvt

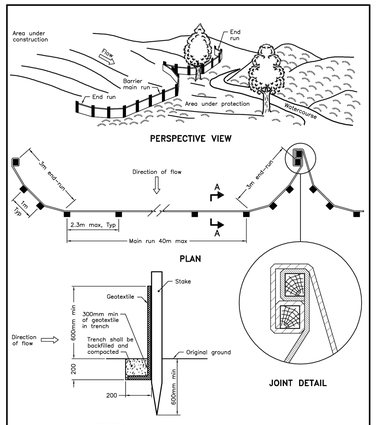

NOTE:
A All dimensions are in millimetres unless otherwise shown.

ONTARIO PROVINCIAL STANDARD DRAWING | Nov 2015 | Rev 2

LIGHT–DUTY SILT FENCE BARRIER

OPSD 219.110

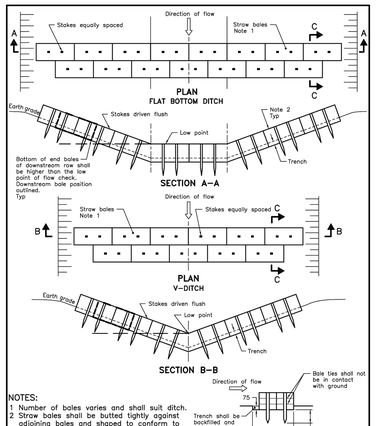

NOTES:
1 Number of bales varies and shall suit ditch.
2 Straw bales shall be butted tightly against adjoining bales and shaped to conform to the sides of the ditch to prevent water flow through barrier.
A All dimensions are in millimetres unless otherwise shown.

ONTARIO PROVINCIAL STANDARD DRAWING | Nov 2015 | Rev 2

STRAW BALE FLOW CHECK DAM

OPSD 219.180

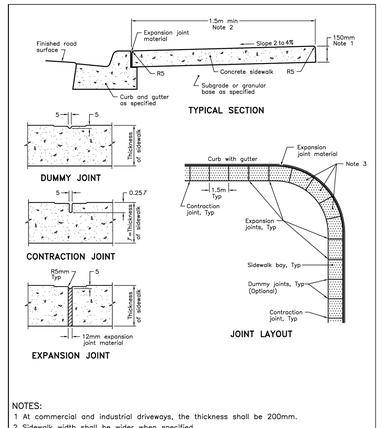

NOTES:
1 At commercial and industrial driveways, the thickness shall be 200mm.
2 Sidewalk width shall be wider when specified.
3 This OPSD shall be read in conjunction with OPSD 310.030, 310.031, 310.033, and 310.039.
A All dimensions are in millimetres unless otherwise shown.

ONTARIO PROVINCIAL STANDARD DRAWING | Nov 2019 | Rev 3

CONCRETE SIDEWALK ADJACENT TO CURB WITH GUTTER

OPSD 310.020

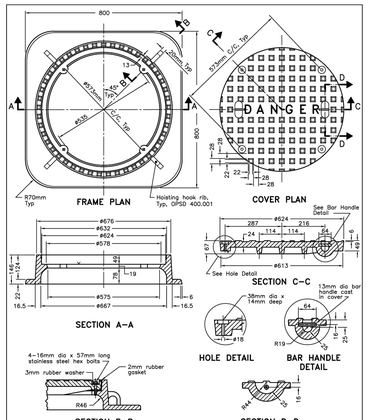

NOTE:
A All dimensions are in millimetres unless otherwise shown.

ONTARIO PROVINCIAL STANDARD DRAWING | Nov 2018 | Rev 4

CAST IRON, SQUARE FRAME WITH CIRCULAR WATERTIGHT COVER FOR MAINTENANCE HOLES

OPSD 401.030

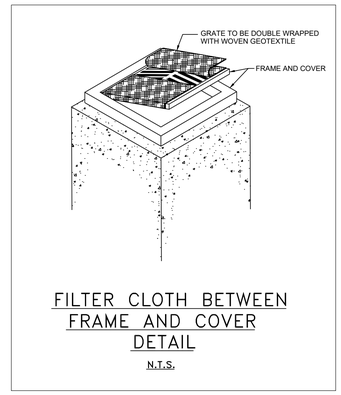

FILTER CLOTH BETWEEN FRAME AND COVER DETAIL

N.T.S.

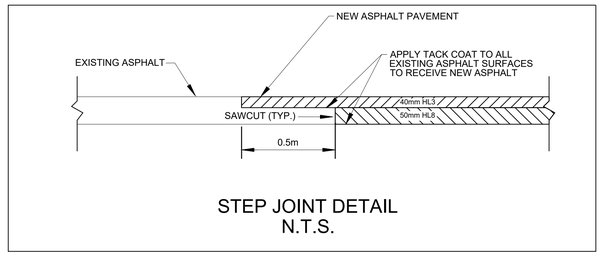

STEP JOINT DETAIL

N.T.S.

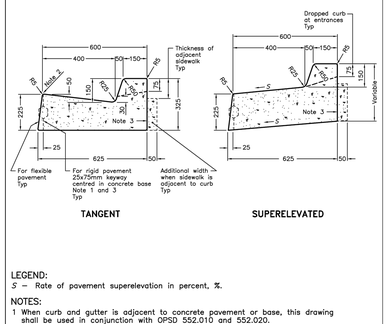

LEGEND:
S – Rate of pavement superelevation in percent, %.

NOTES:
1 When curb and gutter is adjacent to concrete pavement or base, this drawing shall be used in conjunction with OPSD 552.010 and 552.020.
2 Flexible and composite pavement shall be placed 5mm above the adjacent edge of gutter.
3 For slipforming procedure a 5% batter is acceptable.
A Treatment at entrances shall be according to OPSD 351.010.
B Outlet treatment shall be according to the OPSD 610 Series.
C The transition from one curb type to another shall be a minimum length of 3.0m, except in conjunction with guide rail where it shall be according to the OPSD 900 Series.
D All dimensions are in millimetres unless otherwise shown.

ONTARIO PROVINCIAL STANDARD DRAWING | Nov 2012 | Rev 2

CONCRETE BARRIER CURB WITH WIDE GUTTER

OPSD 600.010

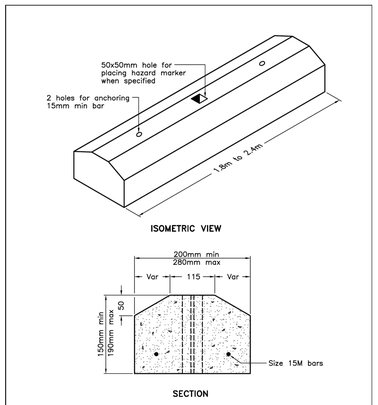

NOTES:
A Class of concrete shall be C2 according to CSA A23.1.
B All dimensions are in millimetres unless otherwise shown.

ONTARIO PROVINCIAL STANDARD DRAWING | Nov 2012 | Rev 2

PRECAST CONCRETE CURB

OPSD 603.020

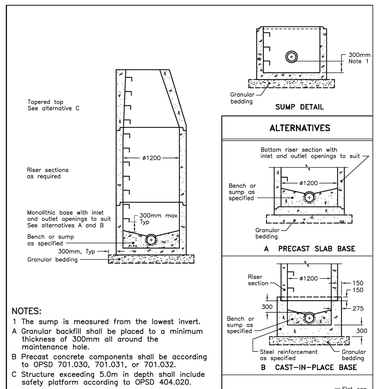

NOTES:
1 The sump is measured from the lowest invert.
A Granular backfill shall be placed to a minimum thickness of 300mm all around the maintenance hole.
B Precast concrete components shall be according to OPSD 701.030, 701.031, or 701.032.
C Structure exceeding 5.0m in depth shall include safety platform according to OPSD 404.020.
D Pipe support according to OPSD 708.020.
E For benching and pipe opening details, see OPSD 701.021.
F For adjustment unit and frame installation, see OPSD 704.010.
G All dimensions are nominal.
H All dimensions are in millimetres unless otherwise shown.

ONTARIO PROVINCIAL STANDARD DRAWING | Nov 2014 | Rev 5

PRECAST CONCRETE MAINTENANCE HOLE 1200mm DIAMETER

OPSD 701.010

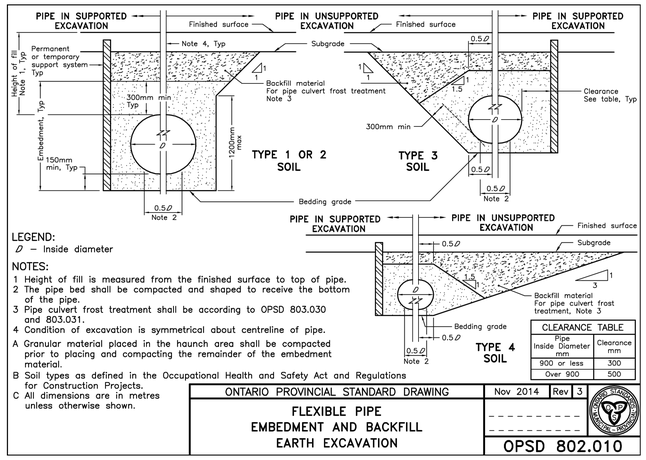

CLEARANCE TABLE	
Pipe Inside Diameter mm	Clearance mm
900 or less	300
Over 900	500

LEGEND:
D – Inside diameter

NOTES:
1 Height of fill is measured from the finished surface to top of pipe.
2 The pipe bed shall be compacted and shaped to receive the bottom of the pipe.
3 Pipe culvert frost treatment shall be according to OPSD 803.030 and 803.031.
4 Condition of excavation is symmetrical about centreline of pipe.
A Granular material placed in the haunch area shall be compacted prior to placing and compacting the remainder of the embedment material.
B Soil types as defined in the Occupational Health and Safety Act and Regulations for Construction Projects.
C All dimensions are in metres unless otherwise shown.

ONTARIO PROVINCIAL STANDARD DRAWING | Nov 2014 | Rev 3

FLEXIBLE PIPE EMBEDMENT AND BACKFILL EARTH EXCAVATION

OPSD 802.010

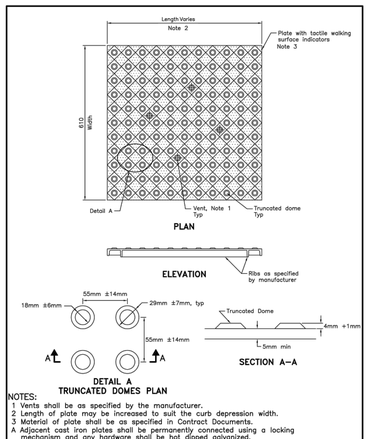

NOTES:
1 Vents shall be as specified by the manufacturer.
2 Length of plate may be increased to suit the curb depression width.
3 Material of plate shall be as specified in Contract Documents.
A Adjacent cast iron plates shall be permanently connected using a locking mechanism and any hardware shall be hot dipped galvanized.
B All dimensions are in millimetres unless otherwise shown.

ONTARIO PROVINCIAL STANDARD DRAWING | Nov 2019 | Rev 1

CONCRETE SIDEWALK RAMPS TACTILE WALKING SURFACE INDICATORS COMPONENT

OPSD 310.039

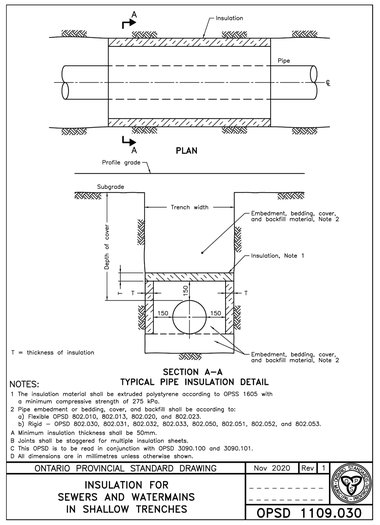

NOTES:
1 The insulation material shall be extruded polystyrene according to OPSS 1605 with a minimum compressive strength of 275 kPa.
2 Pipe embedment or bedding, cover, and backfill shall be according to:
a) Flexible OPSD 802.010, 802.013, 802.020, and 802.023.
b) Rigid – OPSD 802.030, 802.031, 802.032, 802.033, 802.050, 802.051, 802.052, and 802.053.
A Minimum insulation thickness shall be 50mm.
B Joints shall be staggered for multiple insulation sheets.
C This OPSD is to be read in conjunction with OPSD 3090.100 and 3090.101.
D All dimensions are in millimetres unless otherwise shown.

ONTARIO PROVINCIAL STANDARD DRAWING | Nov 2020 | Rev 1

INSULATION FOR SEWERS AND WATERMAINS IN SHALLOW TRENCHES

OPSD 1109.030

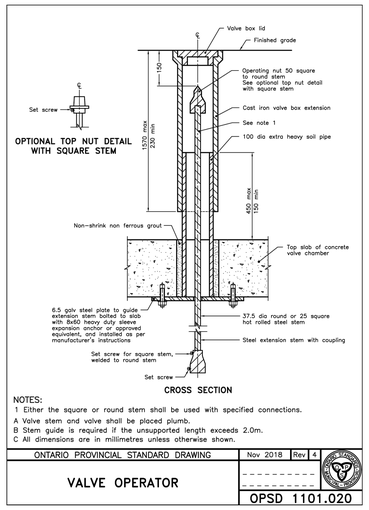

NOTES:
1 Either the square or round stem shall be used with specified connections.
A Valve stem and valve shall be placed plumb.
B Stem guide is required if the unsupported length exceeds 2.0m.
C All dimensions are in millimetres unless otherwise shown.

ONTARIO PROVINCIAL STANDARD DRAWING | Nov 2018 | Rev 4

VALVE OPERATOR

OPSD 1101.020

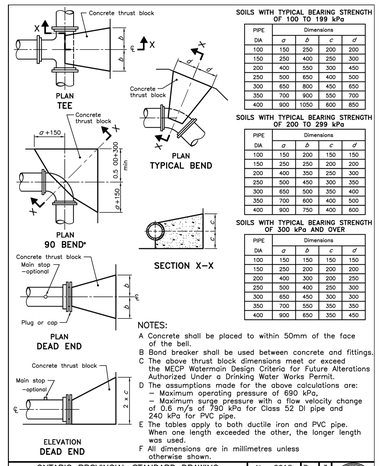

SOILS WITH TYPICAL BEARING STRENGTH OF 100 TO 199 kPa

PIPE	Dimensions			
DIA	a	b	c	d
100	150	250	200	200
150	250	400	250	300
200	400	550	300	450
250	500	650	400	500
300	650	800	450	650
350	700	900	550	700
400	900	1050	600	850

SOILS WITH TYPICAL BEARING STRENGTH OF 200 TO 299 kPa

PIPE	Dimensions			
DIA	a	b	c	d
100	150	200	150	150
150	250	250	200	200
200	400	350	250	300
250	500	450	300	350
300	650	500	350	400
350	700	600	400	500
400	900	750	400	600

SOILS WITH TYPICAL BEARING STRENGTH OF 300 kPa AND OVER

PIPE	Dimensions			
DIA	a	b	c	d
100	150	150	150	150
150	250	200	200	200
200	400	300	200	250
250	500	400	250	300
300	650	450	300	300
350	700	550	350	350
400	900	650	350	450

NOTES:
A Concrete shall be placed to within 50mm of the face of the bell.
B Bond breaker shall be used between concrete and fittings.
C The above thrust block dimensions meet or exceed the MECP Watermain Design Criteria for Future Alterations Authorized Under a Drinking Water Works Permit.
D The assumptions made for the above calculations are:
– Maximum operating pressure of 690 kPa,
– Maximum surge pressure with a flow velocity change of 0.6 m/s of 790 kPa for Class 52 DI pipe and 240 kPa for PVC pipe.
E The tables apply to both ductile iron and PVC pipe. When one length exceeded the other, the longer length was used.
F All dimensions are in millimetres unless otherwise shown.

ONTARIO PROVINCIAL STANDARD DRAWING | Nov 2018 | Rev 3

CONCRETE THRUST BLOCKS FOR TEES, PLUGS, AND HORIZONTAL BENDS

OPSD 1103.010

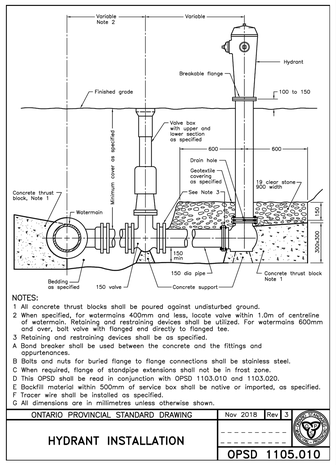

NOTES:
1 All concrete thrust blocks shall be poured against undisturbed ground.
2 When specified, for watermains 400mm and less, locate valve within 1.0m of centreline of watermain. Retaining and restraining devices shall be utilized. For watermains 600mm and over, bolt valve with flanged end directly to flanged tee.
3 Retaining and restraining devices shall be as specified.
A Bond breaker shall be used between the concrete and the fittings and appurtenances.
B Bolts and nuts for buried flange to flange connections shall be stainless steel.
C When required, flange of standpipe extensions shall not be in frost zone.
D This OPSD shall be read in conjunction with OPSD 1103.010 and 1103.020.
E Backfill material within 500mm of service box shall be native or imported, as specified.
F Tracer wire shall be installed as specified.
G All dimensions are in millimetres unless otherwise shown.

ONTARIO PROVINCIAL STANDARD DRAWING | Nov 2018 | Rev 3

HYDRANT INSTALLATION

OPSD 1105.010

Government of Canada | Gouvernement du Canada

LEVEL OF SECURITY | NIVEAU DE SÉCURITÉ
TO BE REVIEWED | À ÊTRE RÉVISÉ

Ainley GROUP
CONSULTING ENGINEERS PLANNERS
2724 Fenton Road
Ottawa, Ontario
K1T 3T7
Telephone: (613) 822-1052
Fax: (613) 822-1573

Professional Engineers Ontario
JANUARY 24, 2025
Limited Licensee
Name: J.W.XU
Number: 100171806
Category: CIVIL: see limitation
Limitations:
This licence is subject to the limitations as detailed on the certificate.
Association of Professional Engineers of Ontario

LICENSED PROFESSIONAL ENGINEER
A. AL-FARAJ
100569923
JAN 24, 2025
PROVINCE OF ONTARIO

NO.	DATE	REVISION	APPR.
1	2025/01/24	ISSUED FOR TENDER	JX

SCALE | ÉCHELLE
1:200

LOCATION | EMPLACEMENT
Canadian Forces Base (CFB)
KINGSTON, ONTARIO

PROJECT | PROJET
Canadian Forces Housing Agency (CFHA) Apartment Buildings Tier 4 6-Plex

TRADE | MÉTIER	DATE
6	2024/10/25

SUBJECT | SUJET
DETAILS

PRODUCTION	REVIEWED | REVU	
DESIGNED | ÉTUDIÉ JX	XX | XX	DES O | AGENT CONC
DRAWN | DESSINÉ JX		PROJ MGR | GEST PROJ
CHECKED | VÉRIFIÉ AAF/JX		DES MGR | GEST CONC
COORDINATION		FIRE | INCENDIE

WBS NO. | NO. OTP
PF NO. | NO. DP ZKN99

DWG. NO. | NO. DESSIN
L - KN - ZKN99 - 601 - A

Canada

BORDER LAST UPDATED 2019-08-20

2025/Jan/21, 5:15pm jxu b1 1000X707_E I:\DRAWINGS\23692-1 CFB Borden & Kingston\CFB Kingston\Design\Municipal design set\C601-A-N1.dwg

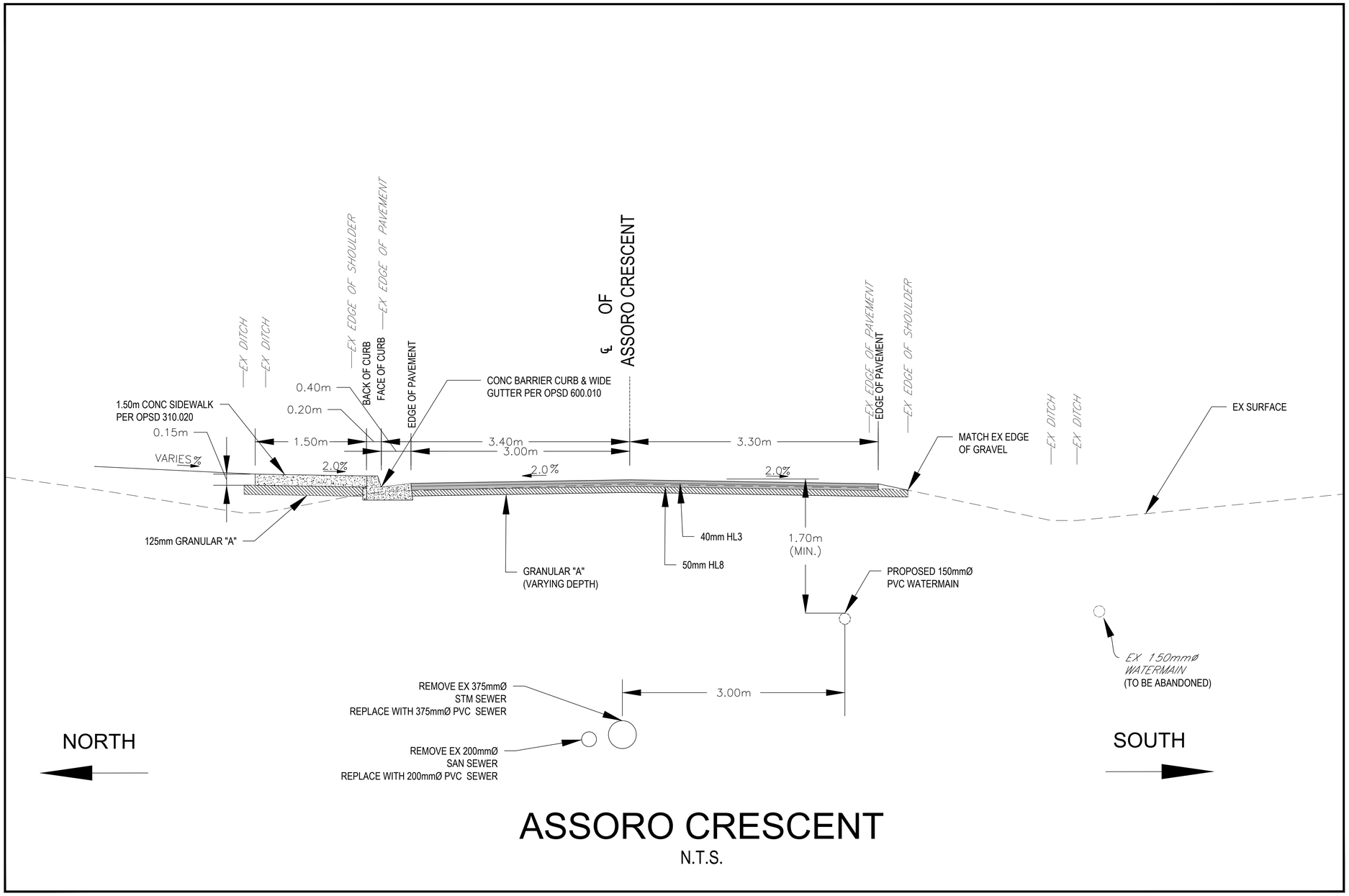

ASSORO CRESCENT

N.T.S.

Government of Canada | Gouvernement du Canada

LEVEL OF SECURITY | NIVEAU DE SÉCURITÉ
TO BE REVIEWED | À ÊTRE RÉVISÉ

Ainley GROUP
CONSULTING ENGINEERS PLANNERS
2724 Fenton Road
Ottawa, Ontario
K1T 3T7
Telephone: (613) 822-1052
Fax: (613) 822-1573

Professional Engineers Ontario
JANUARY 24, 2025
Limited Licensee
Name: J.W.XU
Number: 100171806
Category: CIVIL: see limitation
Limitations:
This licence is subject to the limitations as detailed on the certificate.
Association of Professional Engineers of Ontario

LICENSED PROFESSIONAL ENGINEER
A. AL-FARAJ
100569923
JAN 24, 2025
PROVINCE OF ONTARIO

NO.	DATE	REVISION	APPR.
1	2025/01/24	ISSUED FOR TENDER	JX

SCALE | ÉCHELLE
1:25

LOCATION | EMPLACEMENT
Canadian Forces Base (CFB)
KINGSTON, ONTARIO

PROJECT | PROJET
Canadian Forces Housing Agency (CFHA) Apartment Buildings Tier 4 6-Plex

TRADE | MÉTIER: 6
DATE: 2024/10/25

SUBJECT | SUJET
TYPICAL CROSS SECTION

PRODUCTION	REVIEWED	REVU
DESIGNED | ÉTUDIÉ: JX	XX | XX	DES O | AGENT CONC
DRAWN | DESSINÉ: JX		PROJ MGR | GEST PROJ
CHECKED | VÉRIFIÉ: AAF/JX		DES MGR | GEST CONC
COORDINATION		FIRE | INCENDIE

WBS NO. | NO. OTP
PF NO. | NO. DP: ZKN99

DWG. NO. | NO. DESSIN: L - KN - ZKN99 - 602 - A

Canada

BORDER LAST UPDATED 2019-05-20

I:\DRAWINGS\23692-1 CFB Borden & Kingston\CFB Kingston\Design\Municipal design set\C602-A-DET1.dwg
b1 1000X707_E jxu 2025Jan21 5:22pm

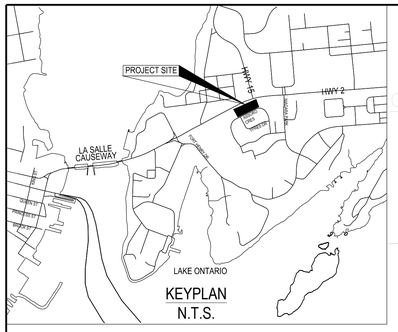

KEYPLAN
N.T.S.

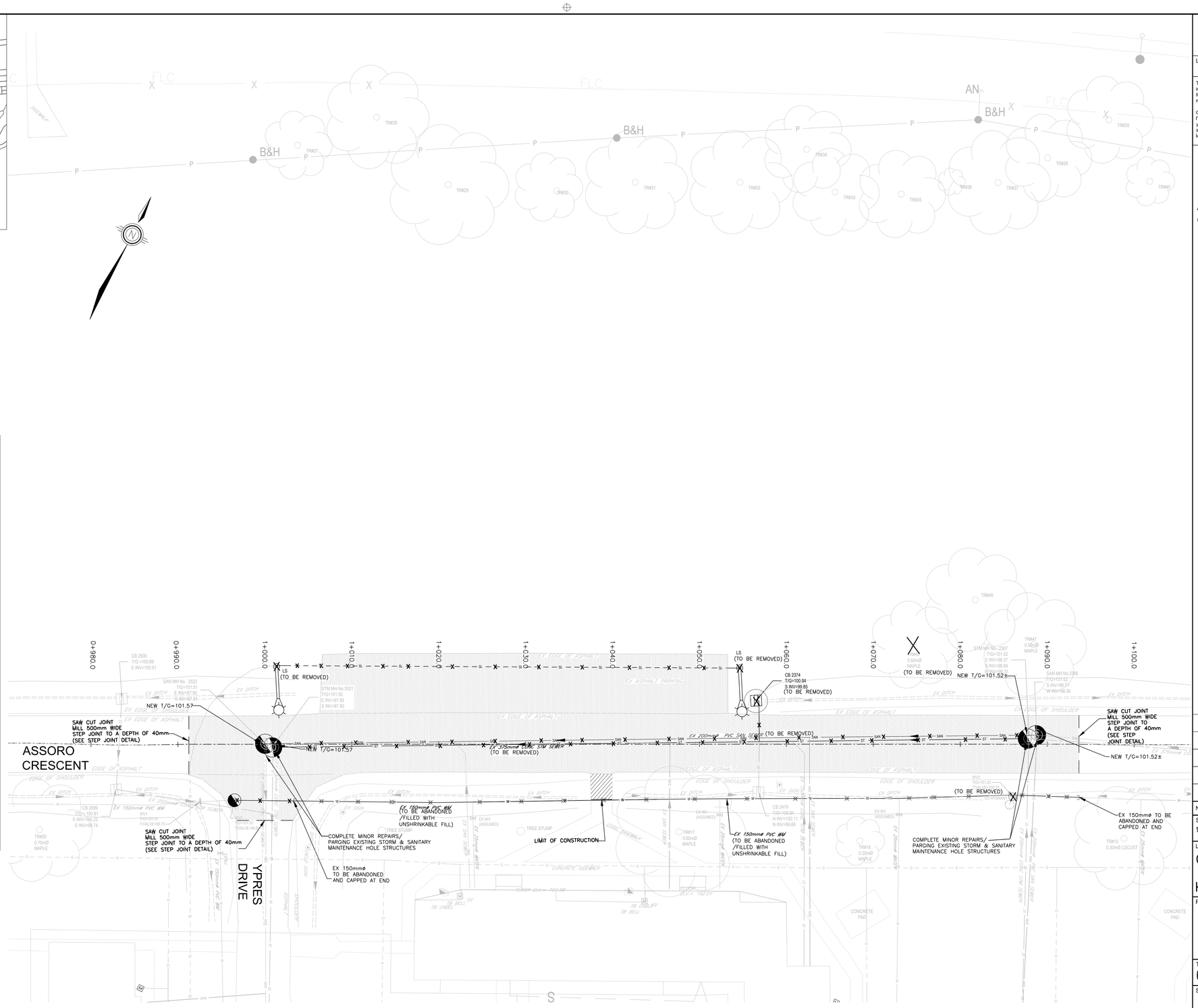

LEGEND

- EXISTING SANITARY SEWER
- EXISTING WATERMAIN
- EXISTING STORM SEWER
- EXISTING FENCE
- EXISTING HYDRO POLE/LIGHT STANDARD
- EXISTING CATCHBASIN
- EXISTING GASMAIN
- EXISTING UNDERGROUND HYDRO
- EXISTING UH FA
- EXISTING UT COM
- EXISTING HYDRANT
- EXISTING V&VB, V&VC
- ASPHALT ROAD REMOVAL
- CONCRETE REMOVAL
- REMOVE EX SAN SEWER
- REMOVE EX STM SEWER
- REMOVE EX WATERMAIN
- EX WATERMAIN TO BE ABANDONED
- REMOVE EX STREET LIGHT
- REMOVE EX LIGHT POLE
- MANHOLE & WV ADJUSTMENT

Government of Canada | Gouvernement du Canada

LEVEL OF SECURITY | NIVEAU DE SÉCURITÉ
TO BE REVIEWED | À ÊTRE RÉVISÉ

BORDER LAST UPDATED 2016-05-20

Ainley GROUP
CONSULTING ENGINEERS PLANNERS
2724 Fenton Road
Ottawa, Ontario
K1T 3T7
Telephone: (613) 822-1052
Fax: (613) 822-1573

Professional Engineers Ontario
JANUARY 24, 2025
Limited Licensee
Name: J.W.XU
Number: 100171806
Category: CIVIL: see limitation
Limitations:
This licence is subject to the limitations as detailed on the certificate.
Association of Professional Engineers of Ontario

LICENSED PROFESSIONAL ENGINEER
A. AL-FARAJ
100569923
JAN 24, 2025
PROVINCE OF ONTARIO

NO.	DATE	REVISION	APPR.
1	2025/01/24	ISSUED FOR TENDER	JX

SCALE | ÉCHELLE
1:200

LOCATION | EMPLACEMENT
Canadian Forces Base (CFB)

KINGSTON, ONTARIO

PROJECT | PROJET
Canadian Forces Housing Agency (CFHA) Apartment Buildings
Tier 4 6-Plex

TRADE | MÉTIER: 6
DATE: 2024/10/25

SUBJECT | SUJET
REMOVAL PLAN

PRODUCTION	REVIEWED | REVU	
DESIGNED | ÉTUDIÉ JX	XX | XX	DES O | AGENT CONC
DRAWN | DESSINÉ CK		PROJ MGR | GEST PROJ
CHECKED | VÉRIFIÉ AAF/JX		DES MGR | GEST CONC
COORDINATION		FIRE | INCENDIE

WBS NO. | NO. OTP
PF NO. | NO. DP: ZKN99

DWG. NO. | NO. DESSIN
L - KN - ZKN99 - 603 - A

Canada

2025/Jan/22, 3:32pm jxu b1 1000X707_E I:\DRAWINGS\29892-1 CFB Borden & Kingston\CFB Kingston\Design\Municipal design set\C603-A-REM1.dwg

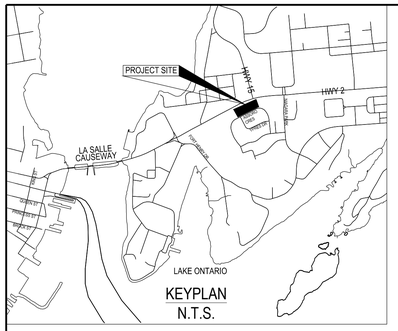

KEYPLAN
N.T.S.

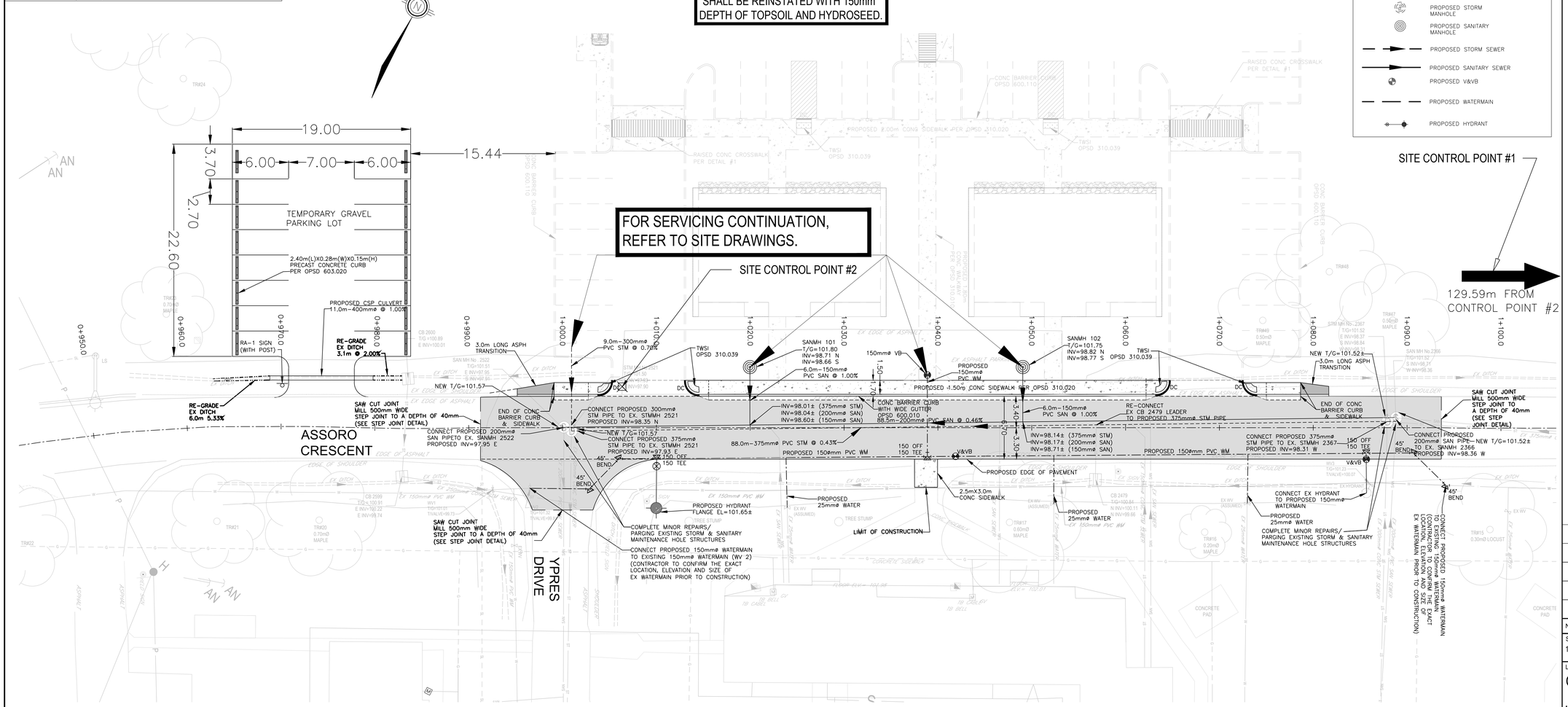

LEGEND

- EXISTING SANITARY SEWER
- EXISTING WATERMAIN
- EXISTING STORM SEWER
- EXISTING FENCE
- EXISTING HYDRO POLE/LIGHT STANDARD
- EXISTING CATCHBASIN
- EXISTING GASMAIN
- EXISTING UNDERGROUND HYDRO
- EXISTING UH FA
- EXISTING UT COM
- EXISTING HYDRANT
- EXISTING V&VB, V&VC
- PROPOSED STORM MANHOLE
- PROPOSED SANITARY MANHOLE
- PROPOSED STORM SEWER
- PROPOSED SANITARY SEWER
- PROPOSED V&VB
- PROPOSED WATERMAIN
- PROPOSED HYDRANT

THE CONTRACTOR TO CONFIRM LOCATION(S) AND ELEVATION(S) OF EXISTING SERVICES AND STRUCTURES TO BE CONNECTED TO AND EXISTING SERVICES THAT MAY CAUSE CONFLICT PRIOR TO CONSTRUCTION OF ANY NEW SEWER, WATER AND /OR STORM WATER WORKS.
DCC REPRESENTATIVE SHALL BE INFORMED IMMEDIATELY OF ANY ERRORS, DISCREPANCIES, CONFLICTS, OMISSIONS etc THAT ARE FOUND.

RE-CONNECT ALL EXISTING SANITARY LATERALS TO THE PROPOSED 200mmØ SANITARY SEWER

RE-CONNECT ALL EXISTING STORM LATERALS TO THE PROPOSED 375mmØ STORM SEWER

RE-CONNECT ALL EXISTING WATER SERVICES TO THE PROPOSED 150mmØ WATERMAIN

TRENCH REINSTATEMENT TO INCLUDE 400mm OF OPSS GRANULAR "B" TYPE II & 150mm OF OPSS GRANULAR "A".

STORM MAINTENANCE HOLE DATA

NO.	NORTHING	EASTING	COVER	STRUCTURE	ELEVATION				
					T/GRATE	N INV.	E INV.	S INV.	W INV.
EX STMMH 2521	---	---	---	---	---	98.35	97.93	97.90	---
EX STMMH 2367	---	---	---	---	---	---	98.37	98.84	98.31

SANITARY MAINTENANCE HOLE DATA

NO.	NORTHING	EASTING	COVER	STRUCTURE	ELEVATION				
					T/GRATE	N INV.	E INV.	S INV.	W INV.
EX SANMH 2522	---	---	---	---	--	---	97.95	97.91	---
EX SANMH 2366	---	---	---	---	--	---	---	98.71	98.36
SANMH 101	4899403.2627	383457.2038	401.030	701.010	101.80	98.71	---	98.66	---
SANMH 102	4899416.2534	383483.2243	401.030	701.010	101.75	98.82	---	98.77	---

SURVEY NOTES:

1. EXISTING SITE PLAN INFORMATION COMPLETED BY FIELD SURVEY ON AUGUST 1, 2019 BY AINLEY GROUP AND FROM GIS DATA DERIVED FROM DND GIS MAPPING. CONDITIONS MAY DIFFER THAN THOSE SHOWN.
2. EXISTING MUNICIPAL PLAN INFORMATION COMPLETED BY FIELD SURVEY ON AUGUST 1, 2019 BY AINLEY GROUP AND FROM GIS DATA DERIVED FROM DND GIS MAPPING. CONDITIONS MAY DIFFER THAN THOSE SHOWN.
3. CONTRACTOR TO VERIFY LOCATION AND ELEVATION OF EXISTING SERVICES PRIOR TO ANY CONSTRUCTION.
4. COORDINATES INDICATED REFERENCE UTM NAD83 HORIZONTAL DATUM WITH UTM ZONE 18N USED FOR MAP PROJECTION.
5. ELEVATIONS INDICATED REFERENCE CGVD28 VERTICAL DATUM.
6. ELEVATIONS ARE IN METERS (m).
7. SITE CONTROL POINTS:

1. 110, MAGNAIL IN ASPHALT
   N: 4899453.576
   E: 383561.713
   Z: 101.343
2. 111, MAG NAIL IN ASPHALT
   N: 4899395.328
   E: 383445.956
   Z: 101.585
3. CONCRETE MONUMENT 98, SOUTH END OF PARK ON ASSORO CRESCENT
   N: 4899458.426
   E: 383563.750
   Z: 101.765

8. CONTRACTOR TO CONFIRM HORIZONTAL AND VERTICAL SURVEY CONTROL PRIOR TO CONSTRUCTION. DISCREPANCIES SHALL BE REPORTED TO DCC REPRESENTATIVE IMMEDIATELY.
9. THIS MAP IS A GRAPHICAL REPRESENTATION OF PROPERTY BOUNDARIES WHICH APPROXIMATE THE SIZE, CONFIGURATION AND LOCATION OF PROPERTIES. IT IS NOT A BOUNDARY SURVEY AND IT IS NOT INTENDED TO BE USED FOR LEGAL DESCRIPTION OR TO CALCULATE EXACT DIMENSIONS OR AREA.

Government of Canada | Gouvernement du Canada

LEVEL OF SECURITY | NIVEAU DE SÉCURITÉ
TO BE REVIEWED | À ÊTRE RÉVISÉ

Ainley GROUP
CONSULTING ENGINEERS PLANNERS
2724 Fenton Road
Ottawa, Ontario
K1T 3T7
Telephone: (613) 822-1052
Fax: (613) 822-1573

Professional Engineers Ontario
JANUARY 24, 2025
Limited Licensee
Name: J.W.XU
Number: 100171806
Category: CIVIL: see limitation
Limitations:
This licence is subject to the limitations as detailed on the certificate.
Association of Professional Engineers of Ontario

LICENSED PROFESSIONAL ENGINEER
A. AL-FARAJ
100569923
JAN 24, 2025
PROVINCE OF ONTARIO

NO.	DATE	REVISION	APPR.
1	2025/01/24	ISSUED FOR TENDER	JX

SCALE | ÉCHELLE
1:200

LOCATION | EMPLACEMENT
Canadian Forces Base (CFB)
KINGSTON, ONTARIO

PROJECT | PROJET
Canadian Forces Housing Agency (CFHA) Apartment Buildings Tier 4 6-Plex

TRADE | MÉTIER: 6
DATE: 2024/10/25

SUBJECT | SUJET
SITE SERVICING PLAN

PRODUCTION	REVIEWED | REVU	
DESIGNED | ÉTUDIÉ: JX	XX | XX	DES O | AGENT CONC
DRAWN | DESSINÉ: JX		PROJ MGR | GEST PROJ
CHECKED | VÉRIFIÉ: AAF/JX		DES MGR | GEST CONC
COORDINATION		FIRE | INCENDIE

WBS NO. | NO. OTP
PF NO. | NO. DP: ZKN99

DWG. NO. | NO. DESSIN: L - KN - ZKN99 - 604 - A

Canada

BORDER LAST UPDATED 2016-05-20

I:\DRAWINGS\23692-1 CFB Borden & Kingston\CFB Kingston\Design\Municipal design set\C604-A-S1.DWG
b1 1000X707_E jxu 2025/Jan/22, 4:04pm

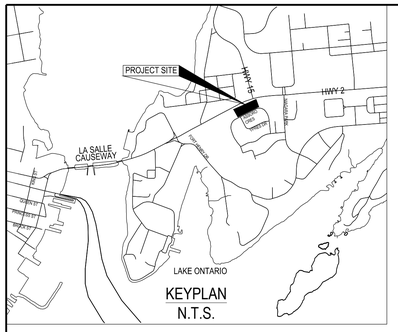

KEYPLAN
N.T.S.

SANITARY MAINTENANCE HOLE DATA

NO.	NORTHING	EASTING	COVER	STRUCTURE	ELEVATION T/GRATE	ELEVATION N INV.	ELEVATION E INV.	ELEVATION S INV.	ELEVATION W INV.
EX SANMH 2522	---	---	---	---	--	---	97.95	97.91	---
EX SANMH 2366	---	---	---	---	--	---	---	98.71	98.36
SANMH 101	4899403.2627	383457.2038	401.030	701.010	101.80	98.71	---	98.66	---
SANMH 102	4899416.2534	383483.2243	401.030	701.010	101.75	98.82	---	98.77	---

STORM MAINTENANCE HOLE DATA

NO.	NORTHING	EASTING	COVER	STRUCTURE	ELEVATION T/GRATE	ELEVATION N INV.	ELEVATION E INV.	ELEVATION S INV.	ELEVATION W INV.
EX STMMH 2521	---	---	---	---	101.57±	98.35	97.93	97.90	---
EX STMMH 2367	---	---	---	---	101.52±	---	98.37	98.84	98.31

THE CONTRACTOR TO CONFIRM LOCATION(S) AND ELEVATION(S) OF EXISTING SERVICES AND STRUCTURES TO BE CONNECTED TO AND EXISTING SERVICES THAT MAY CAUSE CONFLICT PRIOR TO CONSTRUCTION OF ANY NEW SEWER, WATER AND /OR STORM WATER WORKS.
DCC REPRESENTATIVE SHALL BE INFORMED IMMEDIATELY OF ANY ERRORS, DISCREPANCIES, CONFLICTS, OMISSIONS etc THAT ARE FOUND.

FOR SERVICING CONTINUATION, REFER TO SITE DRAWINGS.

LEGEND

- EXISTING SANITARY SEWER
- EXISTING WATERMAIN
- EXISTING STORM SEWER
- EXISTING FENCE
- EXISTING HYDRO POLE/LIGHT STANDARD
- EXISTING CATCHBASIN
- EXISTING GASMAIN
- EXISTING UNDERGROUND HYDRO
- EXISTING UH FA
- EXISTING UT COM
- EXISTING HYDRANT
- EXISTING V&VB, V&VC
- PROPOSED STORM MANHOLE
- PROPOSED SANITARY MANHOLE
- PROPOSED STORM SEWER
- PROPOSED SANITARY SEWER
- PROPOSED V&VB
- PROPOSED WATERMAIN
- PROPOSED HYDRANT

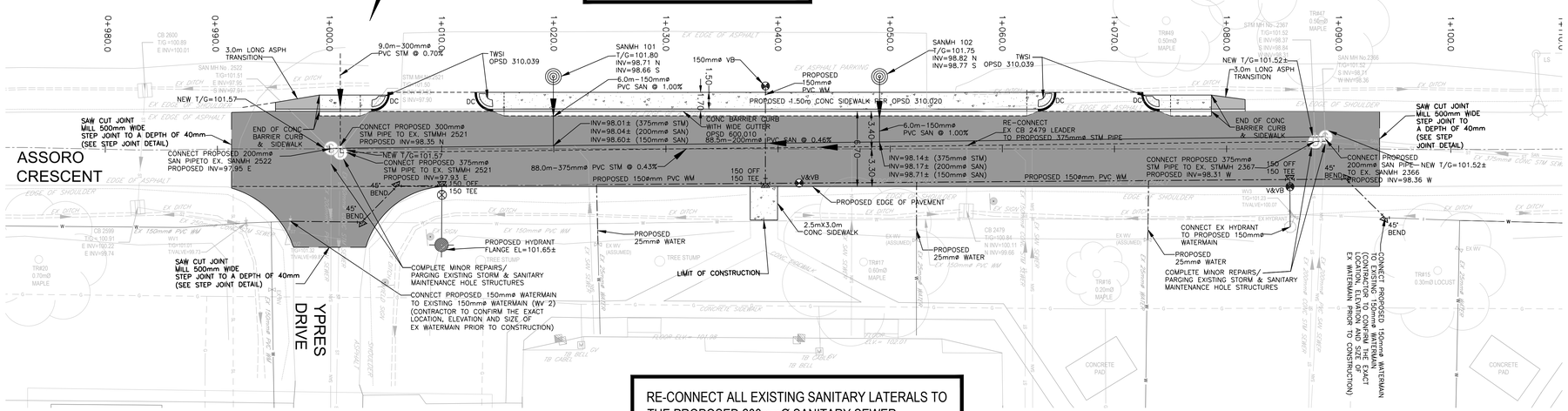

RE-CONNECT ALL EXISTING SANITARY LATERALS TO THE PROPOSED 200mmØ SANITARY SEWER

RE-CONNECT ALL EXISTING STORM LATERALS TO THE PROPOSED 375mmØ STORM SEWER

RE-CONNECT ALL EXISTING WATER SERVICES TO THE PROPOSED 150mmØ WATERMAIN

TRENCH REINSTATEMENT TO INCLUDE 400mm OF OPSS GRANULAR "B" TYPE II & 150mm OF OPSS GRANULAR "A".

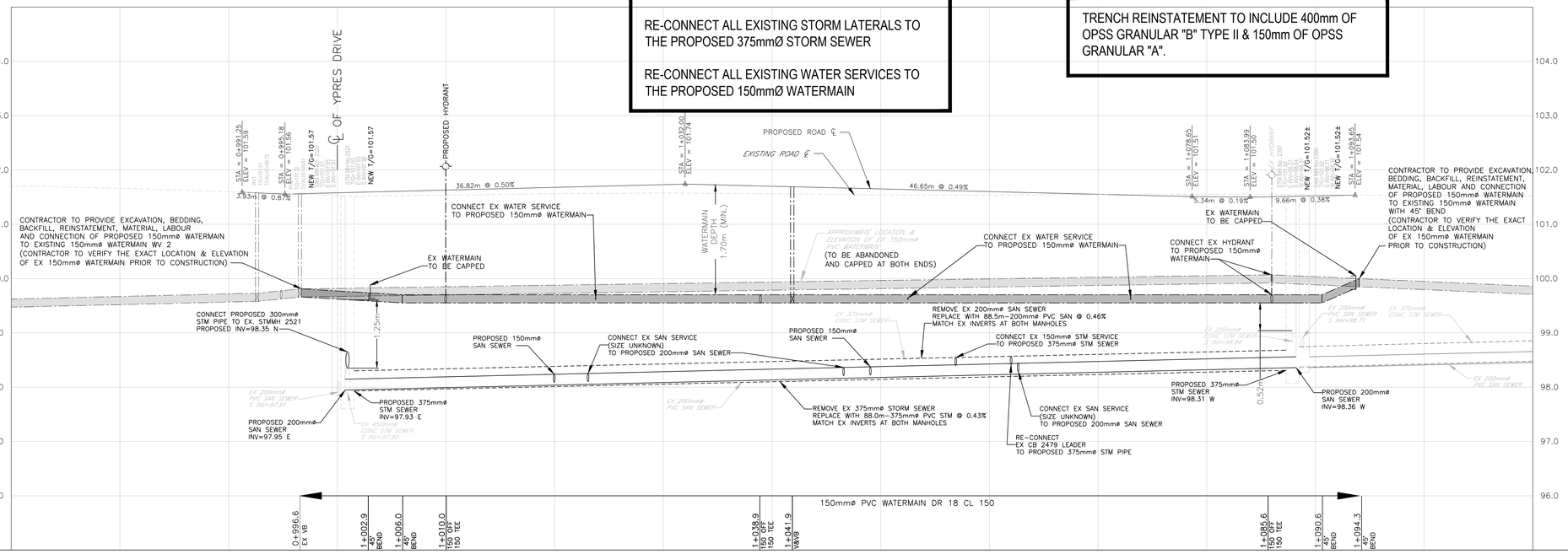

STATION	0+970.0	0+980.0	0+990.0	0+991.2	0+995.2	1+000.0	1+010.0	1+020.0	1+030.0	1+032.0	1+040.0	1+050.0	1+060.0	1+070.0	1+078.6	1+080.0	1+084.0	1+090.0	1+093.7	1+100.0	1+110.0
PROPOSED ROAD ℄ ELEVATION			101.59		101.56	101.58	101.63	101.68		101.73	101.74			101.65		101.60		101.55		101.51	101.51	101.50	101.52	101.54
TOP OF WATERMAIN ELEVATION			99.81		99.77	99.74	99.70	99.70	99.70	99.70	99.70	99.70	99.70	99.70	99.70	99.70	99.70	99.70	99.70	100.00	100.00
STORM SEWER INVERT																					
SANITARY SEWER INVERT																					
EXISTING ℄ R.O.W. ELEVATION	101.70	101.66	101.60	101.60		101.57	101.54	101.56	101.58		101.58	101.54	101.54	101.55	101.55	101.55	101.54	101.54		101.57	101.53

Government of Canada / Gouvernement du Canada

LEVEL OF SECURITY | NIVEAU DE SÉCURITÉ
TO BE REVIEWED | À ÊTRE RÉVISÉ

Ainley GROUP
CONSULTING ENGINEERS PLANNERS
2724 Fenton Road
Ottawa, Ontario
K1T 3T7
Telephone: (613) 822-1052
Fax: (613) 822-1573

Professional Engineers Ontario
JANUARY 24, 2025
Limited Licensee
Name: J.W.XU
Number: 100171806
Category: CIVIL: see limitation
Limitations:
This licence is subject to the limitations as detailed on the certificate.
Association of Professional Engineers of Ontario

LICENSED PROFESSIONAL ENGINEER
A. AL-FARAJ
100569923
JAN 24, 2025
PROVINCE OF ONTARIO

NO.	DATE	REVISION	APPR.
1	2025/01/24	ISSUED FOR TENDER	JX

SCALE | ÉCHELLE
1:200 H - 1:50 V

LOCATION | EMPLACEMENT
Canadian Forces Base (CFB)
KINGSTON, ONTARIO

PROJECT | PROJET
Canadian Forces Housing Agency (CFHA) Apartment Buildings Tier 4 6-Plex

TRADE | MÉTIER: 6
DATE: 2024/10/25

SUBJECT | SUJET
PLAN AND PROFILE

PRODUCTION	REVIEWED	REVU
DESIGNED	XX	XX
JX		DES O | AGENT CONC
DRAWN		PROJ MGR | GEST PROJ
JX		
CHECKED		DES MGR | GEST CONC
AAF/JX		
COORDINATION		FIRE | INCENDIE

WBS NO. | NO. OTP
PF NO. | NO. DP: ZKN99
DWG. NO. | NO. DESSIN: L - KN - ZKN99 - 605 - A

Canada

BORDER LAST UPDATED 2016-05-20

I:\DRAWINGS\23892-1 CFB Borden & Kingston\CFB Kingston\Design\Municipal design set\C605-A-P1.dwg
2025/Jan/22, 3:31pm jxu b1 1000X707_E

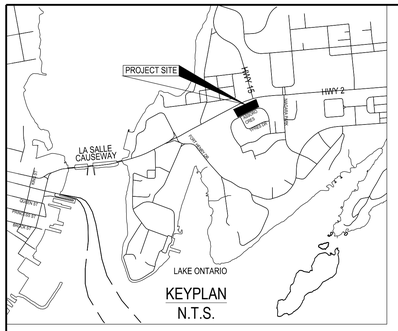

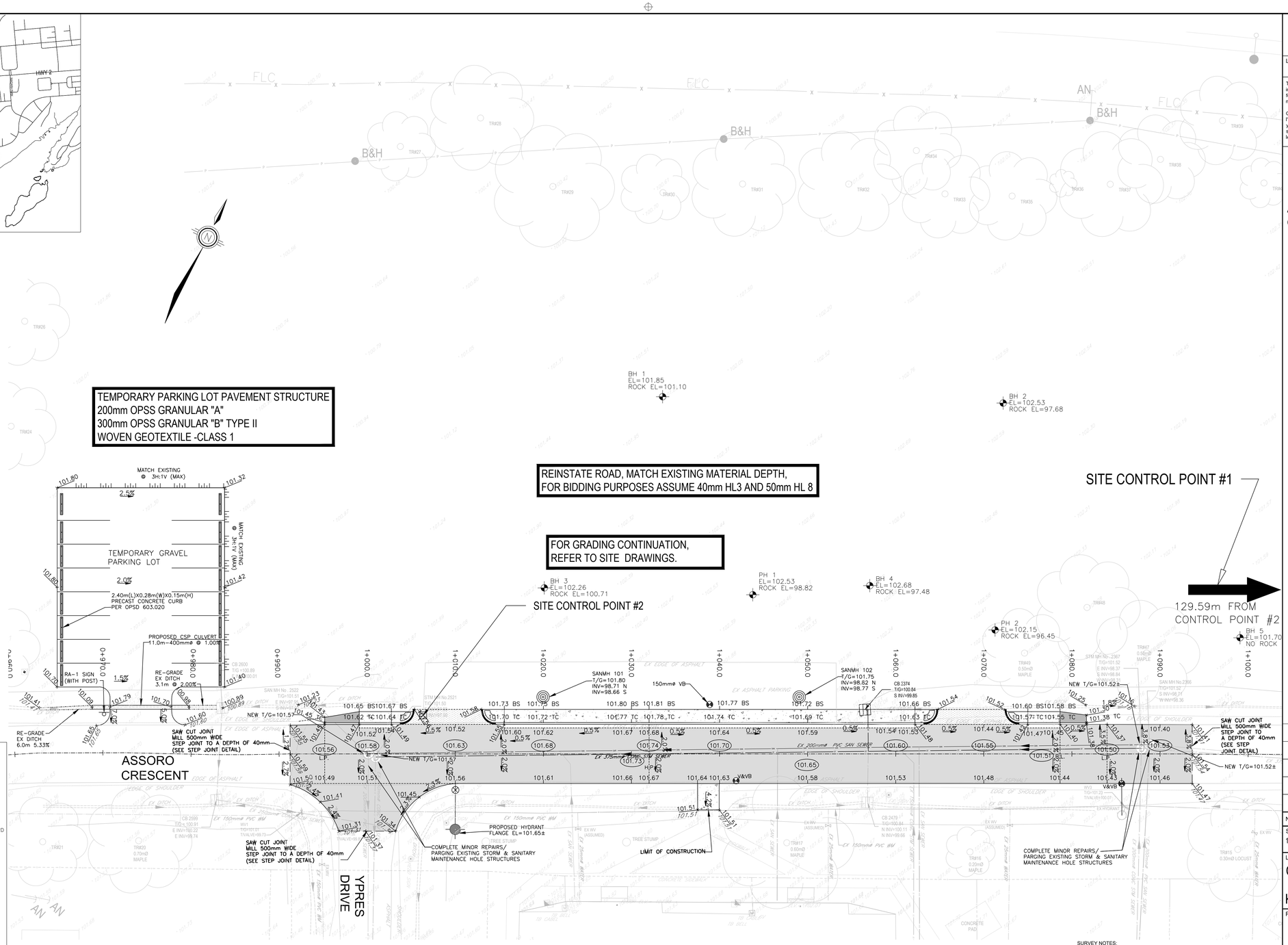

LEGEND

- EXISTING SANITARY SEWER
- EXISTING WATERMAIN
- EXISTING STORM SEWER
- EXISTING FENCE
- EXISTING HYDRO POLE/LIGHT STANDARD
- EXISTING CATCHBASIN
- EXISTING GASMAIN
- EXISTING UNDERGROUND HYDRO
- EXISTING UH FA
- EXISTING UT COM
- EXISTING HYDRANT
- EXISTING V&VB, V&VC
- PROPOSED CATCHBASIN
- PROPOSED STORM MANHOLE
- PROPOSED SANITARY MANHOLE
- PROPOSED V&VB
- PROPOSED HYDRANT
- 101.67 PROPOSED GRADE
- 2.0% DIRECTION AND SLOPE
- 101.80 PROPOSED GRADE
- OVERLAND FLOW ROUTE
- H.P. RIDGE LINE
- ASPHALT REINSTATEMENT (INCL. GRANULAR "A")
- HEAVY DUTY ASPHALT PAVEMENT (REFER TO SITE DRAWINGS)

BOREHOLE DATA

ID	TOP OF GRADE ELEVATION (masl)	BEDROCK ELEVATION (masl)	GROUNDWATER ELEVATION (masl)
BH1	101.85	101.10	NE
BH2	102.53	97.68	102.23
BH3	102.26	100.71	NE
BH4	102.68	97.48	NE
BH5	101.70	NE	NE
PH1	102.53	98.82	NE
PH2	102.15	96.45	NE

SURVEY NOTES:

1. EXISTING SITE PLAN INFORMATION COMPLETED BY FIELD SURVEY ON AUGUST 1, 2019 BY AINLEY GROUP AND FROM GIS DATA DERIVED FROM DND GIS MAPPING. CONDITIONS MAY DIFFER THAN THOSE SHOWN.
2. EXISTING MUNICIPAL PLAN INFORMATION COMPLETED BY FIELD SURVEY ON AUGUST 1, 2019 BY AINLEY GROUP AND FROM GIS DATA DERIVED FROM DND GIS MAPPING. CONDITIONS MAY DIFFER THAN THOSE SHOWN.
3. CONTRACTOR TO VERIFY LOCATION AND ELEVATION OF EXISTING SERVICES PRIOR TO ANY CONSTRUCTION.
4. COORDINATES INDICATED REFERENCE UTM NAD83 HORIZONTAL DATUM WITH UTM ZONE 18N USED FOR MAP PROJECTION.
5. ELEVATIONS INDICATED REFERENCE CGVD28 VERTICAL DATUM.
6. ELEVATIONS ARE IN METERS (m).
7. SITE CONTROL POINTS:

1. 110, MAGNAIL IN ASPHALT
   N: 4899453.576
   E: 383561.713
   Z: 101.343
2. 111, MAG NAIL IN ASPHALT
   N: 4899395.328
   E: 383445.956
   Z: 101.585
3. CONCRETE MONUMENT 98, SOUTH END OF PARK ON ASSORO CRESCENT
   N: 4899458.426
   E: 383563.750
   Z: 101.765

8. CONTRACTOR TO CONFIRM HORIZONTAL AND VERTICAL SURVEY CONTROL PRIOR TO CONSTRUCTION. DISCREPANCIES SHALL BE REPORTED TO DCC REPRESENTATIVE IMMEDIATELY.
9. THIS MAP IS A GRAPHICAL REPRESENTATION OF PROPERTY BOUNDARIES WHICH APPROXIMATE THE SIZE, CONFIGURATION AND LOCATION OF PROPERTIES. IT IS NOT A BOUNDARY SURVEY AND IT IS NOT INTENDED TO BE USED FOR LEGAL DESCRIPTION OR TO CALCULATE EXACT DIMENSIONS OR AREA.

Government of Canada | Gouvernement du Canada

LEVEL OF SECURITY | NIVEAU DE SÉCURITÉ
TO BE REVIEWED | À ÊTRE RÉVISÉ

Ainley GROUP
CONSULTING ENGINEERS PLANNERS
2724 Fenton Road
Ottawa, Ontario
K1T 3T7
Telephone: (613) 822-1052
Fax: (613) 822-1573

Professional Engineers Ontario
JANUARY 24, 2025
Limited Licensee
Name: J.W.XU
Number: 100171806
Category: CIVIL: see limitation
Limitations:
This licence is subject to the limitations as detailed on the certificate.
Association of Professional Engineers of Ontario

LICENSED PROFESSIONAL ENGINEER
A. AL-FARAJ
100569923
JAN 24, 2025
PROVINCE OF ONTARIO

NO.	DATE	REVISION	APPR.
1	2025/01/24	ISSUED FOR TENDER	JX

SCALE | ÉCHELLE
1:200

LOCATION | EMPLACEMENT
Canadian Forces Base (CFB)
KINGSTON, ONTARIO

PROJECT | PROJET
Canadian Forces Housing Agency (CFHA) Apartment Buildings Tier 4 6-Plex

TRADE | MÉTIER: 6
DATE: 2024/10/25

SUBJECT | SUJET
SITE GRADING AND DRAINAGE PLAN

PRODUCTION	REVIEWED	REVU
DESIGNED | ÉTUDIÉ: JX	XX | XX	DES O | AGENT CONC
DRAWN | DESSINÉ: JX		PROJ MGR | GEST PROJ
CHECKED | VÉRIFIÉ: AAF/JX		DES MGR | GEST CONC
COORDINATION		FIRE | INCENDIE

WBS NO. | NO. OTP
PF NO. | NO. DP: ZKN99

DWG. NO. | NO. DESSIN: L - KN - ZKN99 - 606 - A

Canada

BORDER LAST UPDATED 2016-05-20

2025/Jan/22, 4:01pm jxu b1 1000X707_E I:\DRAWINGS\23692-1 CFB Borden & Kingston\CFB Kingston\Design\Municipal design set\C606-A-GR1.dwg

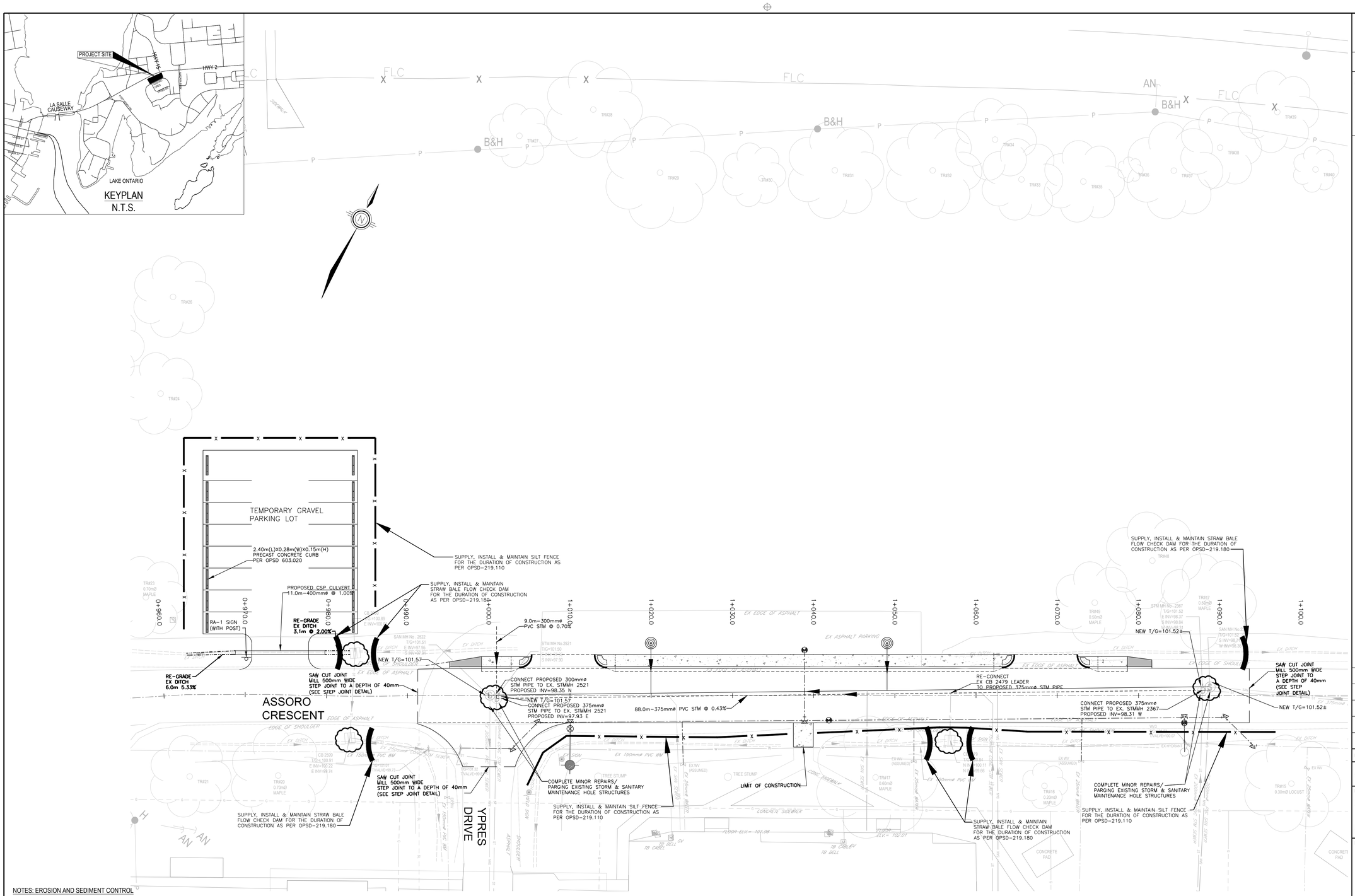

NOTES: EROSION AND SEDIMENT CONTROL

1. SEDIMENT AND EROSION CONTROL MEASURES TO BE CONSTRUCTED AS PER OPSS 805 AND SPEC 01 35 43 ENVIRONMENTAL PROTECTION.

2. THE CONTRACTOR SHALL SUBMIT AN EROSION & SEDIMENT CONTROL PLAN. THE CONTRACTOR IS RESPONSIBLE FOR THE INSTALLATION AND CONSTRUCTION OF ALL SEDIMENT AND EROSION CONTROL MEASURES TO ENSURE THAT SEDIMENT DOES NOT MIGRATE FROM THE CONSTRUCTION SITE. THE CONTRACTOR SHALL IMPLEMENT BEST PRACTICES, TO PROVIDE FOR PROTECTION OF THE AREA DRAINAGE SYSTEM AND THE RECEIVING WATERCOURSES, DURING CONSTRUCTION ACTIVITIES. THIS INCLUDES:

   a. LIMITING THE AMOUNT OF EXPOSED SOIL

   b. INSTALLING SILT FENCES (PER OPSD 219.110) WHERE INDICATED.

   c. INSTALLING STRAW BALE FLOW CHECK DAM (PER OPSD 219.180) ALONG ROADSIDE DITCHES/SWALES AT UPSTREAM OF CATCHBASINS.

   d. OTHER EFFECTIVE SEDIMENT TRAPS.

   THE CONTRACTOR ACKNOWLEDGES THAT FAILURE TO IMPLEMENT APPROPRIATE EROSION AND SEDIMENT CONTROL MEASURES MAY BE SUBJECT TO PENALTIES IMPOSED BY ANY APPLICABLE REGULATORY AGENCY.

3. IN ORDER TO AVOID POLLUTANTS FROM BEING DISCHARGED, THE CONTRACTOR MUST MINIMIZE THE GENERATION OF DUST THROUGH APPROPRIATE APPLICATION OF WATER OR OTHER DUST SUPPRESSION MATERIAL.

4. THE CONTRACTOR IS TO SUPPLY, INSTALL AND MAINTAIN FILTER CLOTH BETWEEN THE FRAME AND COVER ON ALL EXISTING AND PROPOSED CATCH BASINS AND MANHOLES WITHIN CONSTRUCTION LIMITS FOR THE DURATION OF CONSTRUCTION..

5. THE CONTRACTOR'S SUBCONTRACTOR ARE REQUIRED TO COMPLY WITH THE APPROVED EROSION AND SEDIMENT CONTROL PLAN.

LEGEND

- LIGHT DUTY SILT FENCE BARRIER (PER OPSD-219.110)
- STRAW BALE FLOW CHECK DAM (PER OPSD-219.180)
- FILTER CLOTH BETWEEN THE FRAME AND COVER (SEE DETAIL)

Government of Canada | Gouvernement du Canada

LEVEL OF SECURITY | NIVEAU DE SÉCURITÉ
TO BE REVIEWED | À ÊTRE RÉVISÉ

Ainley GROUP
CONSULTING ENGINEERS PLANNERS
2724 Fenton Road
Ottawa, Ontario
K1T 3T7
Telephone: (613) 822-1052
Fax: (613) 822-1573

Professional Engineers Ontario
JANUARY 24, 2025
Limited Licensee
Name: J.W.XU
Number: 100171806
Category: CIVIL: see limitation
Limitations:
This licence is subject to the limitations as detailed on the certificate.
Association of Professional Engineers of Ontario

LICENSED PROFESSIONAL ENGINEER
A. AL-FARAJ
100569923
JAN 24, 2025
PROVINCE OF ONTARIO

NO.	DATE	REVISION	APPR.
1	2025/01/24	ISSUED FOR TENDER	JX

SCALE | ECHELLE
1:200

LOCATION | EMPLACEMENT
Canadian Forces Base (CFB)
KINGSTON, ONTARIO

PROJECT | PROJET
Canadian Forces Housing Agency (CFHA) Apartment Buildings Tier 4 6-Plex

TRADE | MÉTIER: 6
DATE: 2024/10/25

SUBJECT | SUJET
EROSION AND SEDIMENT CONTROL PLAN

PRODUCTION	REVIEWED | REVU	
DESIGNED | ÉTUDIÉ: JX	XX | XX	DES O | AGENT CONC
DRAWN | DESSINÉ: JX		PROJ MGR | GEST PROJ
CHECKED | VÉRIFIÉ: AAF/JX		DES MGR | GEST CONC
COORDINATION		FIRE | INCENDIE

WBS NO. | NO. OTP
PF NO. | NO. DP: ZKN99

DWG. NO. | NO. DESSIN: L - KN - ZKN99 - 607 - A

Canada

BORDER LAST UPDATED 2016-05-20

2025/Jan/22, 3:33pm jxu b1 1000X707_E I:\DRAWINGS\23692-1 CFB Borden & Kingston\CFB Kingston\Design\Municipal design set\C607-A-SC1.dwg